Patio Sample Plans

City of Paso Robles Building Division Phone (805) 237-3850 Fax (805) 238-4704

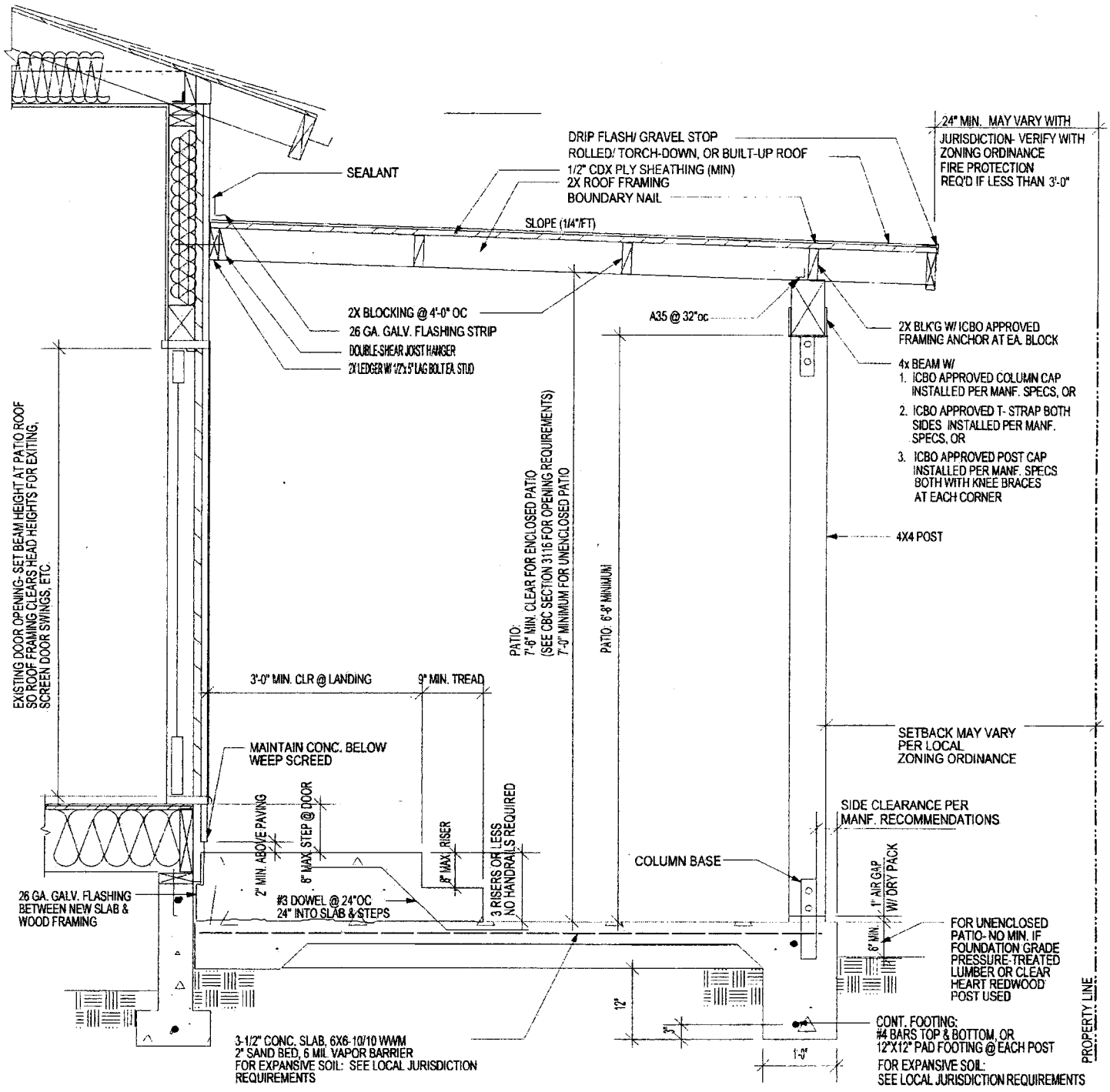

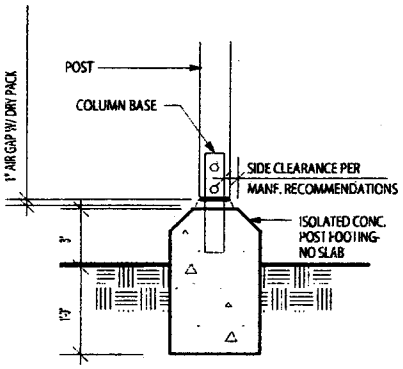

ALT. FOOTING DETAIL

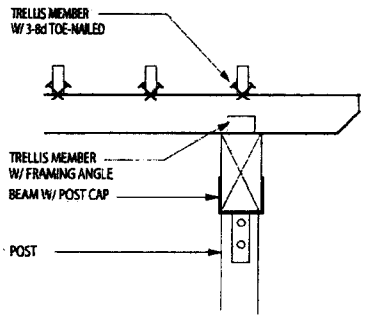

TRELLIS DETAIL

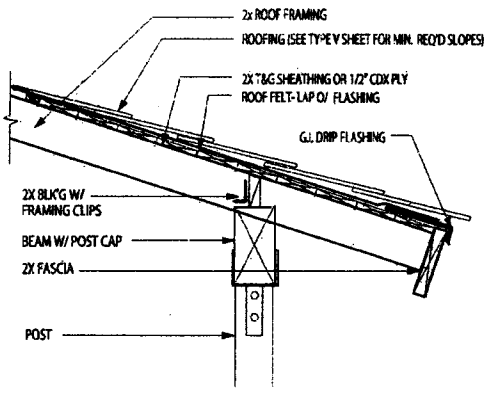

ALTERNATE EAVE DETAIL

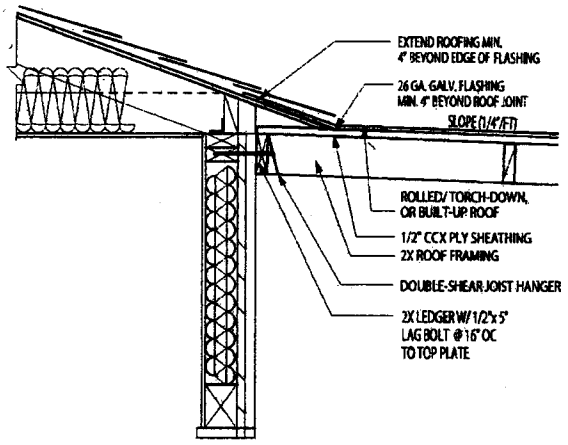

ALTERNATE CONNECTION DETAIL

ALLOWABLE SPANS FOR DF#1 HEADERS
Maximum span of tributary load: 20'-0"

SPAN	BEAM SIZE
Up to 4'-0"	4x4
4'-1" to 6'-0"	4x6
6'-1" to 8'-0"	4x8
8'-1" to 10'-0"	4x10
10'-0" to 12'-0"	4x12*

* 4x12 DF No.1 may be used over a 16'-0" garage door in one-story open patio or carport structures.

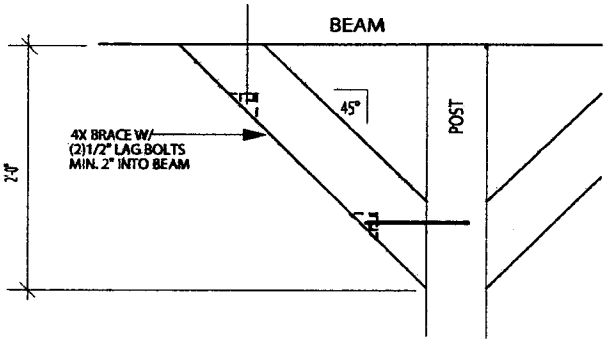

KNEE BRACE DETAIL

ALLOWABLE SPANS FOR DF #2 ROOF RAFTERS
Light Dead Load (up to 15 psf)/ Max. Roofing Load: 6 psf (Asphalt Shingles)
Live Load: 20 psf

RAFTER SIZE	SPACING	ALLOWABLE SPAN
2x6	24" 16" 12"	8'-8" 10'-8" 12'-4"
2x8	24" 16" 12"	11'-0" 13'-5" 15'-6"
2x10	24" 16" 12"	14'-0" 17'-2" 19'-10"
2x12	24" 16" 12"	17'-0" 20'-10" 24'-1"

ALLOWABLE SPANS FOR DF #2 CEILING JOISTS
Dead Load: 10 psf/ Live Load: 10 psf

JOIST SIZE	SPACING	ALLOWABLE SPAN
2x4	24" 16" 12"	9'-10" 11'-3" 12'-5"
2x6	24" 16" 12"	15'-6" 17'-8" 19'-6"
2x8	24" 16" 12"	20'-5" 23'-4" 25'-8"
2x10	12"	26'-0"

TYPE V CONSTRUCTION IS A CLASSIFICATION OF BUILDINGS BY CONSTRUCTION MATERIALS AND METHODS. IT IS THE LEAST RESTRICTIVE PERMITTED BY THE UNIFORM BUILDING CODE AND INCLUDES LIGHT, WOOD-FRAME CONSTRUCTION. THIS SHEET IS FOR INFORMATION AND REFERENCE ONLY AND IS NOT A SUBSTITUTE FOR ACCURATE DRAWINGS PREPARED FOR EACH PROPOSED CONSTRUCTION PROJECT.