TOOKIT DOCUMENT #3

Solar PV Standard Plan – Simplified Central/String Inverter Systems for One- and Two-Family Dwellings

SCOPE: Use this plan ONLY for utility-interactive central/string inverter systems not exceeding a system AC inverter output rating of 10kW on the roof of a one- or two-family dwelling or accessory structure. The photovoltaic system must interconnect to the load side of a single-phase AC service panel of nominal 120/240Vac with a bus bar rating of 225A or less. This plan is not intended for bipolar systems, hybrid systems or systems that utilize storage batteries, charge controllers, trackers, more than two inverters or more than one DC combiner (noninverter-integrated) per inverter. Systems must be in compliance with current California Building Standards Codes and local amendments of the authority having jurisdiction (AHJ). Other Articles of the California Electrical Code (CEC) shall apply as specified in 690.3.

MANUFACTURER'S SPECIFICATION SHEETS MUST BE PROVIDED for proposed inverter, modules, combiner/junction boxes and racking systems. Installation instructions for bonding and grounding equipment shall be provided, and local AHJs may require additional details. Listed and labeled equipment shall be installed and used in accordance with any instructions included in the listing or labeling (CEC 110.3). Equipment intended for use with PV system shall be identified and listed for the application (CEC 690.4[D]).

Job Address: _____ Permit #: _____

Contractor/ Engineer / Architect Name: _____ License # and Class: _____

Signature: _____ Date: _____ Phone Number: _____

Total # of Inverters installed: _____ (If more than one inverter, complete and attach the "Supplemental Calculation Sheets" and the "Load Center Calculations" if a new load center is to be used.)

Inverter 1 AC Output Power Rating: _____ Watts

Inverter 2 AC Output Power Rating (if applicable): _____ Watts

Combined Inverter Output Power Rating: _____ ≤ 10,000 Watts

Location Ambient Temperatures (Check box next to which lowest expected temperature is used):

1) ☐ Lowest expected ambient temperature for the location (T_L) = **Between -1 to -5 °C**

☐ Lowest expected ambient temperature for the location (T_L) = **Between -6 to -10 °C**

Average ambient high temperature (T_H) = 47 °C

Note: For a lower T_L or a higher T_H, use the Comprehensive Standard Plan

DC Information:

Module Manufacturer: _____ Model: _____	
2) Module V_{oc} (from module nameplate): _____Volts	3) Module I_{sc} (from module nameplate): _____Amps
4) Module DC output power under standard test conditions (STC) = _____ Watts (STC)	

5) DC Module Layout

Identify each source circuit (string) for inverter 1 shown on the roof plan with a Tag (e.g., A, B ,C…)	Number of modules per source circuit for inverter 1	Identify, by tag, which source circuits on the roof are to be paralleled (if none, put N/A)
		Combiner 1:
		Combiner 2:
Total number of source circuits for inverter 1:	0	

6) Are DC/DC Converters used? ☐ Yes ☐ No If No, skip to STEP 7. If Yes, enter info below.

DC/DC Converter Model #: _____

Max DC Output Current: _____ Amps

Max # of DC/DC Converters in an Input Circuit: _____

DC/DC Converter Max DC Input Voltage: _____Volts

Max DC Output Voltage: _____Volts

DC/DC Converter Max DC Input Power: __ _____ Watts

7) Max. System DC Voltage – Use A1 or A2 for systems without DC/DC converters, and B1 or B2 with DC/DC converters.

☐ A1. Module V_{OC} (STEP 2) = _____ x # in series (STEP 5) _____x 1.12 (If $-1 \leq T_L \leq -5°C$, STEP 1) = _____ V

☐ A2. Module V_{OC} (STEP 2) = _____ x # in series (STEP 5) _____x 1.14 (If $-6 \leq T_L \leq -10°C$, STEP 1) = _____ V

Table 1. Maximum Number of PV Modules in Series Based on Module Rated VOC for 600 Vdc Rated Equipment (CEC 690.7)

Max. Rated Module VOC (*1.12) (Volts)	29.76	31.51	33.48	35.71	38.27	41.21	44.64	48.70	53.57	59.52	66.96	76.53	89.29
Max. Rated Module VOC (*1.14) (Volts)	29.24	30.96	32.89	35.09	37.59	40.49	43.86	47.85	52.63	58.48	65.79	75.19	87.72
Max # of Modules for 600 Vdc	18	17	16	15	14	13	12	11	10	9	8	7	6

Use for DC/DC converters. The value calculated below must be less than DC/DC converter max DC input voltage (STEP #6).

☐ B1. Module V_{OC} (STEP 2)_____ x # of modules per converter (STEP 6)____x 1.12 (If $-1 \leq T_L \leq -5°C$, STEP 1) = _____ V

☐ B2. Module V_{OC} (STEP 2)_____ x # of modules per converter (STEP 6)____x 1.14 (If $-6 \leq T_L \leq -10°C$, STEP 1) = _____ V

Table 2. Largest Module VOC for Single-Module DC/DC Converter Configurations (With 80V AFCI Cap) (CEC 690.7 and 690.11)

Max. Rated Module VOC (*1.12) (Volts)	30.4	33.0	35.7	38.4	41.1	43.8	46.4	49.1	51.8	54.5	57.1	59.8	62.5	65.2	67.9	70.5
Max. Rated Module VOC (*1.14) (Volts)	29.8	32.5	35.1	37.7	40.4	43.0	45.6	48.2	50.9	53.5	56.1	58.8	61.4	64.0	66.7	69.3
DC/DC Converter Max DC Input (STEP #6) (Volts)	34	37	40	43	46	49	52	55	58	61	64	67	70	73	76	79

8) Maximum System DC Voltage from DC/DC Converters to Inverter – Only required if Yes in STEP 6

Maximum System DC Voltage = _____ Volts

9) Maximum Source Circuit Current

Is Module I_{SC} below 9.6 Amps (STEP 3)? ☐ Yes ☐ No (if No, use Comprehensive Standard Plan)

10) Sizing Source Circuit Conductors
Source Circuit Conductor Size = Min. #10 AWG copper conductor, 90°C wet (USE-2, PV Wire, XHHW-2, THWN-2, RHW-2)
For up to 8 conductors in roof-mounted conduit exposed to sunlight at least ½" from the roof covering (CEC 310)
Note: For over 8 conductors in the conduit or mounting height of lower than ½"from the roof, use Comprehensive Plan.

11) Are PV source circuits combined prior to the inverter?)? ☐ Yes ☐ No
If No, use Single Line Diagram 1 with Single Line Diagram 3 and proceed to STEP 13.
If Yes, use Single Line Diagram 2 with Single Line Diagram 4 and proceed to STEP 12.
Is source circuit OCPD required? ☐ Yes ☐ No
Source circuit OCPD size (if needed): 15 Amps

12) Sizing PV Output Circuit Conductors – If a combiner box will NOT be used from [STEP 11],
Output Circuit Conductor Size = Min. #6 AWG copper conductor

13) Inverter DC Disconnect
Does the inverter have an integrated DC disconnect? ☐ Yes ☐ No If yes, proceed to STEP 14.
If no, the external DC disconnect to be installed is rated for _____ Amps (DC) and _____Volts (DC)

14) Inverter information
Manufacturer: _____ Model: _____
Max. Continuous AC Output Current Rating: _____Amps
Integrated DC Arc-Fault Circuit Protection? ☐ Yes ☐ No (If No is selected, Comprehensive Standard Plan)
Grounded or Ungrounded System: ☐ Grounded ☐ Ungrounded

AC Information:

15) Sizing Inverter Output Circuit Conductors and OCPD
Inverter Output OCPD rating = _____ Amps (Table 3)
Inverter Output Circuit Conductor Size = _____ AWG (Table 3)

Table 3. Minimum Inverter Output OCPD and Circuit Conductor Size

Inverter Continuous Output Current Rating (Amps) (STEP#14)	12	16	20	24	28	32	36	40	48
Minimum OCPD Size (Amps)	15	20	25	30	35	40	45	50	60
Minimum Conductor Size (AWG, 75°C, Copper)	14	12	10	10	8	8	6	6	6

Integrated DC Arc-Fault Circuit Protection? ☐ Yes ☐ No (If No is selected, Comprehensive Standard Plan)
Grounded or Ungrounded System? ☐ Grounded ☐ Ungrounded

16) Point of Connection to Utility

Only load side connections are permitted with this plan. Otherwise, use Comprehensive Standard Plan.

Is the PV OCPD positioned at the opposite end from input feeder location or main OCPD location? ☐ Yes ☐ No

If Yes, circle the Max Combined PV System OCPD(s) at 120% value as determined from STEP 15 (or STEP S20), bus bar Rating, and Main OCPD as shown in Table 4.

If No, circle the Max Combined PV System OCPD(s) at 100% value as determined from STEP 15 (or STEP S20), bus bar Rating, and Main OCPD as shown in Table 4.

Per 705.12(D)(2): [Inverter output OCPD size [STEP #15 or S20] + Main OCPD Size]≤[bus size × (100% or 120%)]

Table 4. Maximum Combined Supply OCPDs Based on Bus Bar Rating (Amps) per CEC 705.12(D)(2)

Bus bar Rating	100	125	125	200	200	200	225	225	225
Main OCPD	100	100	125	150	175	200	175	200	225
Max Combined PV System OCPD(s) at 120% of bus bar Rating	20	50	25	60*	60*	40	60*	60*	45
Max Combined PV System OCPD(s) at 100% of bus bar Rating	0	25	0	50	25	0	50	25	0

*This value has been lowered to 60 A from the calculated value to reflect 10kW AC size maximum.

Reduction of the main breaker is not permitted with this plan. Otherwise, use Comprehensive Standard Plan.

17 & 18 & 19) Labels and Grounding and Bonding

This content is covered by the labels on Page 4 and the Single Line Diagram(s). For background information, refer to the Comprehensive Standard Plan.

Solar PV Standard Plan – Simplified
Central/String Inverter Systems for One- and Two-Family Dwellings

Markings

CEC Articles 690 and 705 and CRC Section R331 require the following labels or markings be installed at these components of the photovoltaic system:

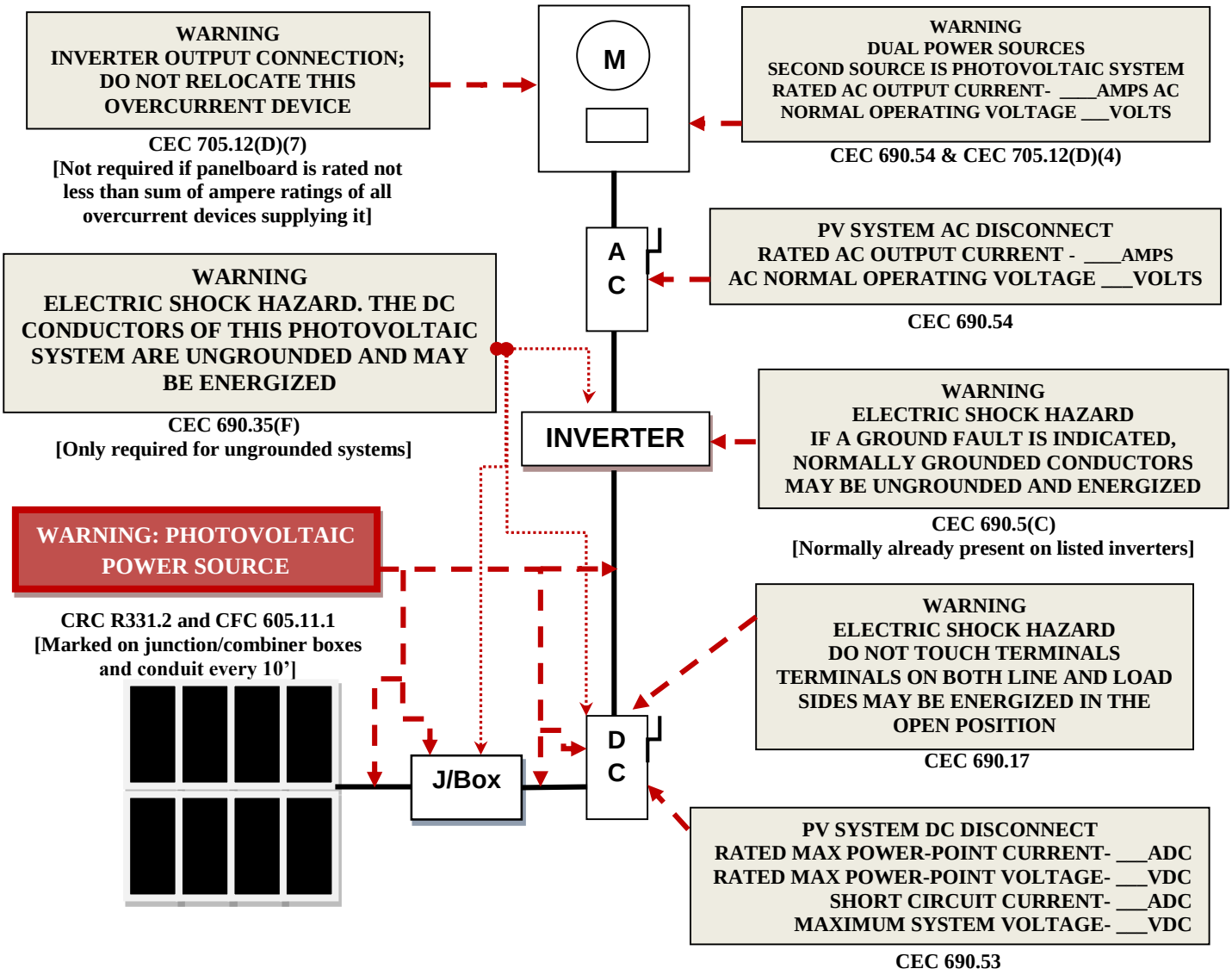

<u>Code Abbreviations</u>:
California Electrical Code (CEC)
California Residential Code (CRC)
California Fire Code (CFC)

Informational note: ANSI Z535.4 provides guidelines for the design of safety signs and labels for application to products. A phenolic plaque with contrasting colors between the text and background would meet the intent of the code for permanency. No type size is specified, but 20 point (3/8") should be considered the minimum.

CEC 705.12 requires a permanent plaque or directory denoting all electric power sources on or in the premises.

Solar PV Standard Plan – Simplified
Central/String Inverter System for One- and Two-Family Dwellings

TAG	DESCRIPTION
1	SOLAR PV MODULE / STRING
2	DC/DC CONVERTERS INSTALLED? YES / NO (IF YES, STEPS 6 & 8 REQUIRED)
3	SOURCE CIRCUIT JUNCTION BOX INSTALLED?: YES / NO
4	SEPARATE DC DISCONNECT INSTALLED?: YES / NO
5	INTERNAL INVERTER DC DISCONNECT: YES / NO
6	CENTRAL INVERTER
7	LOAD CENTER INSTALLED?: YES / NO
8	PV PRODUCTION METER INSTALLED?: YES / NO
9	*SEPARATE AC DISCONNECT INSTALLED?: YES / NO
10	CONNECT TO INVERTER #2 (USE LINE DIAGRAM 2)

* Consult with your local AHJ and /or Utility

SINGLE-LINE DIAGRAM #1 – NO STRINGS COMBINED PRIOR TO INVERTER

CHECK A BOX FOR WHETHER SYSTEM IS GROUNDED OR UNGROUNDED: ☐ **GROUNDED (INCLUDE GEC)** ☐ **UNGROUNDED**

FOR UNGROUNDED SYSTEMS:
- **DC OCPD MUST DISCONNECT BOTH CONDUCTORS OF EACH SOURCE CIRCUIT**
- **UNGROUNDED CONDUCTORS MUST BE IDENTIFIED PER 210.5(C). WHITE-FINISHED CONDUCTORS ARE NOT PERMITTED.**

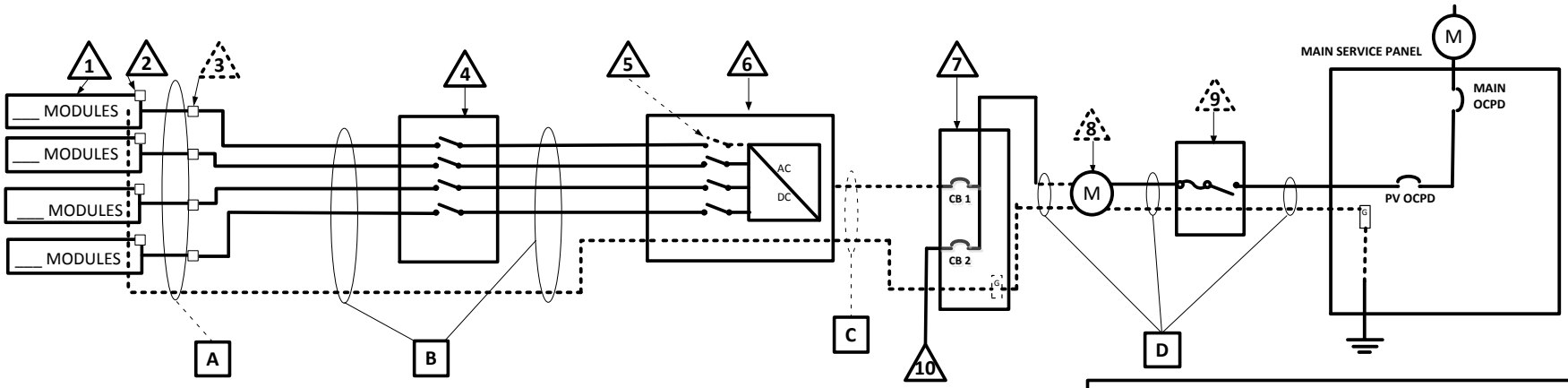

IF DC/DC CONVERTERS ARE USED, CHECK THE BOX BELOW THE CORRESPONDING CONFIGURATION

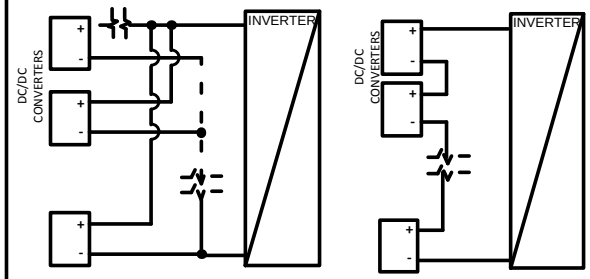

☐ PARALLEL DC/DC CONVERTERS ON ONE SOURCE CIRCUIT (FIXED UNIT VOLTAGE DC/DC CONVERTERS)

☐ DC/DC CONVERTERS ARE ALL RUN IN SERIES (FIXED SOURCE CIRCUIT VOLTAGE DC/DC CONVERTERS)

CONDUCTOR/CONDUIT SCHEDULE

☐ TAG	DESCRIPTION AND CONDUCTOR TYPE	CONDUCTOR SIZE	NUMBER OF CONDUCTORS	CONDUIT/CABLE TYPE	CONDUIT SIZE
A	USE-2 ☐ OR PV-WIRE ☐				
	EGC/GEC:				
B					
	EGC/GEC:				
C					
	EGC/GEC:				
D					
	EGC/GEC:				

ENTER "N/A" WHERE SUITABLE FOR WHEN NOT USING CONDUIT OR CABLE AS PERMITTED BY CODE

Solar PV Standard Plan – Simplified
Central/String Inverter System for One- and Two-Family Dwellings

△TAG	DESCRIPTION
1	SOLAR PV MODULE / STRING
2	DC/DC CONVERTERS INSTALLED? YES / NO (IF YES, STEPS 6 & 8 REQUIRED)
3	SOURCE CIRCUIT JUNCTION BOX INSTALLED?: YES / NO
4	COMBINER BOX (STEPS 11 & 12 REQUIRED)
5	SEPARATE DC DISCONNECT INSTALLED?: YES / NO
6	INTERNAL INVERTER DC DISCONNECT: YES / NO
7	CENTRAL INVERTER
8	LOAD CENTER INSTALLED?: YES / NO
9	PV PRODUCTION METER INSTALLED?: YES / NO
10	*SEPARATE AC DISCONNECT INSTALLED?: YES / NO
11	CONNECT TO INVERTER #2 (USE LINE DIAGRAM 4)

* Consult with your local AHJ and /or Utility

SINGLE-LINE DIAGRAM #2 – COMBINING STRINGS PRIOR TO INVERTER

CHECK A BOX FOR WHETHER SYSTEM IS GROUNDED OR UNGROUNDED: ☐ **GROUNDED (INCLUDE GEC)** ☐ **UNGROUNDED**

FOR UNGROUNDED SYSTEMS:
- **DC OCPD MUST DISCONNECT BOTH CONDUCTORS OF EACH SOURCE CIRCUIT**
- **UNGROUNDED CONDUCTORS MUST BE IDENTIFIED PER 210.5(C). WHITE-FINISHED CONDUCTORS ARE NOT PERMITTED.**

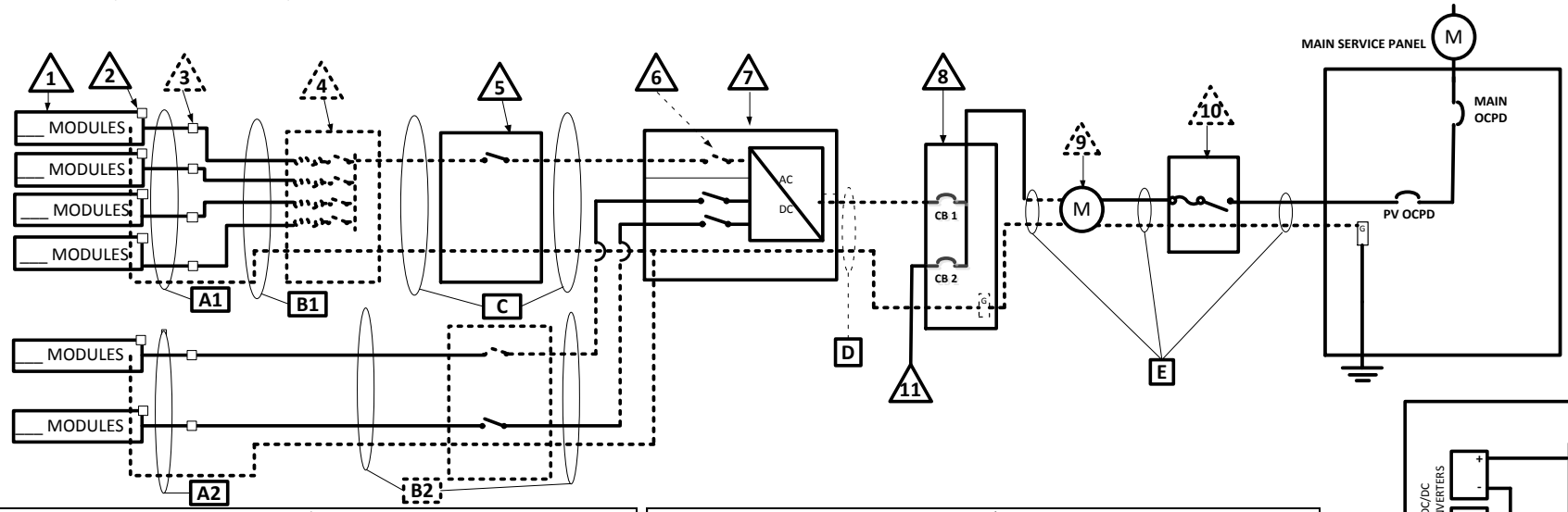

COMBINER CONDUCTOR/CONDUIT SCHEDULE					
☐ TAG	DESCRIPTION AND CONDUCTOR TYPE	CONDUCTOR SIZE	NUMBER OF CONDUCTORS	CONDUIT/CABLE TYPE	CONDUIT SIZE
A1	USE-2 ☐ OR PV-WIRE ☐				
	EGC/GEC:				
B1					
	EGC/GEC:				
C					
	EGC/GEC:				
D					
	EGC/GEC:				
E					
	EGC/GEC:				

NON-COMBINED STRINGS CONDUCTOR/CONDUIT SCHEDULE (IF APPLICABLE)					
☐ TAG	DESCRIPTION AND CONDUCTOR TYPE	CONDUCTOR SIZE	NUMBER OF CONDUCTORS	CONDUIT/CABLE TYPE	CONDUIT SIZE
A2	USE-2 ☐ OR PV-WIRE ☐				
	EGC/GEC:				
B2					
	EGC/GEC:				

ENTER "N/A" WHERE SUITABLE FOR WHEN NOT USING CONDUIT OR CABLE AS PERMITTED BY CODE

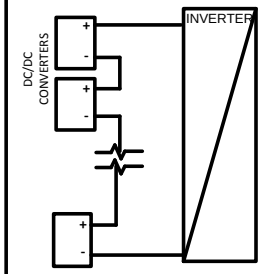

IF DC/DC CONVERTERS ARE USED, THEY ARE RUN IN SERIES (FIXED SOURCE CIRCUIT VOLTAGE DC/DC CONVERTERS)

Solar PV Standard Plan — Simplified
Central/String Inverter Systems for One- and Two-Family Dwellings

Supplemental Calculation Sheets for Inverter #2
(Only include if second inverter is used)

DC Information:

Module Manufacturer: _____ Model: _____	
S2) Module V_{oc} (from module nameplate): _____Volts	S3) Module I_{sc} (from module nameplate): _____Amps
S4) Module DC output power under standard test conditions (STC) = _____ Watts (STC)	

S5) DC Module Layout

Identify each source circuit (string) for inverter 1 shown on the roof plan with a Tag (e.g., A, B, C …)	Number of modules per source circuit for inverter 1	Identify, by tag, which source circuits on the roof are to be paralleled (if none, put N/A)
		Combiner 1:
		Combiner 2:
	23	
Total number of source circuits for inverter 1:	23	

S6) Are DC/DC Converters used? ☐ Yes ☐ No If No, skip to STEP#S7. If Yes, enter info below.

DC/DC Converter Model #: _____
Max DC Output Current: _____ Amps
Max # of DC/DC Converters in a source circuit: _____

DC/DC Converter Max DC Input Voltage: _____Volts
Max DC Output Voltage: _____Volts
DC/DC Converter Max DC Input Power: _____Watts

S7) Max. System DC Voltage – Use A1 or A2 for systems without DC/DC converters, and B1 or B2 with DC/DC converters.

☐ A1. Module V_{OC} (STEP S2) = _____ x # in series (STEP S5)_____x 1.12 (If $-1 \leq T_L \leq -5°C$, STEP S1) = _____ V

☐ A2. Module V_{OC} (STEP S2) = _____ x # in series (STEP S5)_____x 1.14 (If $-6 \leq T_L \leq -10°C$, STEP S1) = _____ V

Table 1. Maximum Number of PV Modules in Series Based on Module Rated VOC for 600 Vdc Rated Equipment (CEC 690.7)													
Max. Rated Module VOC (*1.12) (Volts)	29.76	31.51	33.48	35.71	38.27	41.21	44.64	48.70	53.57	59.52	66.96	76.53	89.29
Max. Rated Module VOC (*1.14) (Volts)	29.24	30.96	32.89	35.09	37.59	40.49	43.86	47.85	52.63	58.48	65.79	75.19	87.72
Max # of Modules for 600 Vdc	18	17	16	15	14	13	12	11	10	9	8	7	6

Use for DC/DC converters. The value calculated below must be less than DC/DC converter max DC input voltage (STEP #S6).

☐ B1. Module V_{OC} (STEP#S2) _____ x # of modules per converter (STEP S6) ____x 1.12 (If $-1 \leq T_L \leq -5°C$, STEP S1) = _____ V

☐ B2. Module V_{OC} (STEP#S2) _____ x # of modules per converter (STEP S6) ____x 1.14 (If $-6 \leq T_L \leq -10°C$, STEP S1) = ____ V

Table 2. Largest Module VOC for Single-Module DC/DC Converter Configurations (With 80V AFCI Cap) (CEC 690.7 and 690.11)																
Max. Rated Module VOC (*1.12) (Volts)	30.4	33.0	35.7	38.4	41.1	43.8	46.4	49.1	51.8	54.5	57.1	59.8	62.5	65.2	67.9	70.5
Max. Rated Module VOC (*1.14) (Volts)	29.8	32.5	35.1	37.7	40.4	43.0	45.6	48.2	50.9	53.5	56.1	58.8	61.4	64.0	66.7	69.3
DC/DC Converter Max DC Input (STEP #6) (Volts)	34	37	40	43	46	49	52	55	58	61	64	67	70	73	76	79

S8) Maximum System DC Voltage from DC/DC Converters to Inverter – Only required if Yes in STEP S6

Maximum System DC Voltage = _____ Volts

S9) Maximum Source Circuit Current

Is Module ISC below 9.6 Amps (STEP S3)? ☐ Yes ☐ No (if No, use Comprehensive Standard Plan)

S10) Sizing Source Circuit Conductors:

Source Circuit Conductor Size = Min. #10 AWG copper conductor, 90°C wet (USE-2, PV Wire, XHHW-2, THWN-2, RHW-2)

For up to 8 conductors in roof-mounted conduit exposed to sunlight at least ½" from the roof covering (CEC 310)

Note: For over 8 conductors in the conduit or mounting height of lower than ½"from the roof, use Comprehensive Plan.

S11) Are PV source circuits combined prior to the inverter? ☐Yes ☐No

If No, use Single Line Diagram 1 with Single Line Diagram 3 and proceed to STEP S13.

If Yes, use Single Line Diagram 2 with Single Line Diagram 4 and proceed to STEP S12.

Is source circuit OCPD required? ☐ Yes ☐ No

Source circuit OCPD size (if needed): 15 Amps

S12) Sizing PV Output Circuit Conductors – If a Combiner box will NOT be used from [STEP#S11],

Output Circuit Conductor Size = Min. #6 AWG copper conductor

S13) Inverter DC Disconnect

Does the inverter have an integrated DC disconnect? ☐ Yes ☐ No If yes, proceed to STEP S14.

If No, the external DC disconnect to be installed is rated for _____ Amps (DC) and _____Volts (DC)

S14) Inverter information:
Manufacturer: _____ Model: _____
Max. Continuous AC Output Current Rating: _____ Amps
Integrated DC Arc-Fault Circuit Protection? ☐ Yes ☐ No (If No is selected, Comprehensive Standard Plan)
Grounded or Ungrounded System: ☐GROUNDED ☐ UNGROUNDED

AC Information:

S15) Sizing Inverter Output Circuit Conductors and OCPD:
Inverter Output OCPD rating = _____ Amps (Table 3)
Inverter Output Circuit Conductor Size = _____ AWG (Table 3)

Table 3. Minimum Inverter Output OCPD and Circuit Conductor Size

Inverter Continuous Output Current Rating (Amps) (STEP 14)	12	16	20	24	28	32	36	40	48
Minimum OCPD Size (Amps)	15	20	25	30	35	40	45	50	60
Minimum Conductor Size (AWG, 75°C, Copper)	14	12	10	10	8	8	6	6	6

Load Center Calculations
(Omit if a load center will not be installed for PV OCPDs)

S20) Load Center Output:
Calculate the sum of the maximum AC outputs from each inverter.
Inverter #1 Max Continuous AC Output Current Rating[STEP S14] _____ × 1.25 = _____ Amps
Inverter #2 Max Continuous AC Output Current Rating[STEP S14] _____ × 1.25 = _____ Amps
Total inverter currents connected to load center (sum of above) = _____ Amps

Conductor Size: _____ AWG
Overcurrent Protection Device: _____ Amps
Load center bus bar rating: _____ Amps
The sum of the ampere ratings of overcurrent devices in circuits supplying power to a bus bar or conductor shall not exceed 120 percent of the rating of the bus bar or conductor.

Solar PV Standard Plan – Simplified
Central/String Inverter System for One- and Two-Family Dwellings

△TAG	DESCRIPTION
1	SOLAR PV MODULE / STRING
2	DC/DC CONVERTERS INSTALLED? YES / NO (IF YES, STEPS 6 & 8 REQUIRED)
3	SOURCE CIRCUIT JUNCTION BOX INSTALLED?: YES / NO
4	SEPARATE DC DISCONNECT INSTALLED?: YES / NO
5	INTERNAL INVERTER DC DISCONNECT: YES / NO
6	CENTRAL INVERTER
7	*SEPARATE AC DISCONNECT INSTALLED?: YES / NO
8	TO LOAD CENTER ON LINE DIAGRAM 1

* Consult with your local AHJ and /or Utility

SINGLE-LINE DIAGRAM #3 – ADDITIONAL INVERTER FOR DIAGRAM #1

INVERTER # 2

CHECK A BOX FOR WHETHER SYSTEM IS GROUNDED OR UNGROUNDED: ☐ **GROUNDED (INCLUDE GEC)** ☐ **UNGROUNDED**

FOR UNGROUNDED SYSTEMS:
- DC OCPD MUST DISCONNECT BOTH CONDUCTORS OF EACH SOURCE CIRCUIT
- UNGROUNDED CONDUCTORS MUST BE IDENTIFIED PER 210.5(C). WHITE-FINISHED CONDUCTORS ARE NOT PERMITTED.

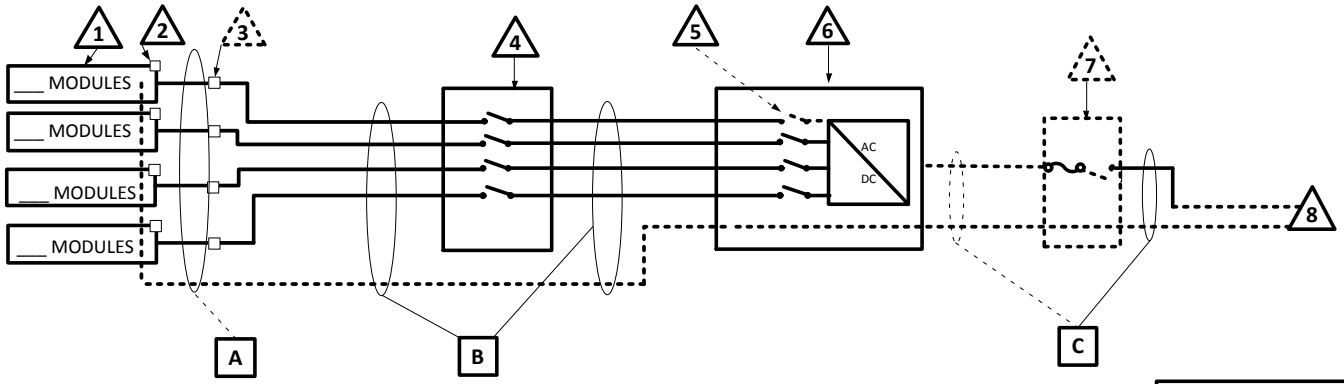

IF DC/DC CONVERTERS ARE USED, CHECK THE BOX BELOW THE CORRESPONDING CONFIGURATION

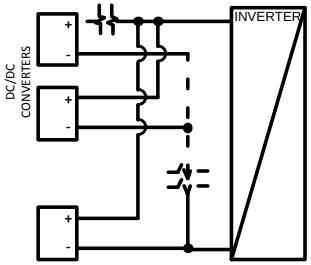

☐ PARALLEL DC/DC CONVERTERS ON ONE SOURCE CIRCUIT (FIXED UNIT VOLTAGE DC/DC CONVERTERS)

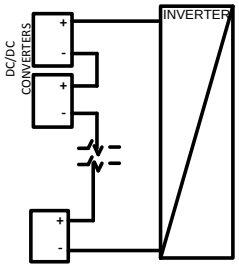

☐ DC/DC CONVERTERS ARE ALL RUN IN SERIES (FIXED SOURCE CIRCUIT VOLTAGE DC/DC CONVERTERS)

CONDUCTOR/CONDUIT SCHEDULE					
☐ TAG	DESCRIPTION AND CONDUCTOR TYPE	CONDUCTOR SIZE	NUMBER OF CONDUCTORS	CONDUIT/CABLE TYPE	CONDUIT SIZE
A	USE-2 □ OR PV-WIRE □				
	EGC/EGC:				
B					
	EGC/EGC:				
C					
	EGC/EGC:				

ENTER "N/A" WHERE SUITABLE FOR WHEN NOT USING CONDUIT OR CABLE AS PERMITTED BY CODE

Solar PV Standard Plan – Simplified
Central/String Inverter System for One- and Two-Family Dwellings

△ TAG	DESCRIPTION
1	SOLAR PV MODULE / STRING
2	DC/DC CONVERTERS INSTALLED? YES / NO (IF YES, STEPS 6 & 8 REQUIRED)
3	SOURCE CIRCUIT JUNCTION BOX INSTALLED?: YES / NO
4	COMBINER BOX (STEPS 11 & 12 REQUIRED)
5	SEPARATE DC DISCONNECT INSTALLED?: YES / NO
6	INTERNAL INVERTER DC DISCONNECT: YES / NO
7	CENTRAL INVERTER
8	*SEPARATE AC DISCONNECT INSTALLED?: YES / NO
9	TO LOAD CENTER ON LINE DIAGRAM 3

* Consult with your local AHJ and /or Utility

SINGLE-LINE DIAGRAM #4 – ADDITIONAL INVERTER FOR DIAGRAM #2

INVERTER # 2

CHECK A BOX FOR WHETHER SYSTEM IS GROUNDED OR UNGROUNDED: ☐ **GROUNDED (INCLUDE GEC)** ☐ **UNGROUNDED**

FOR UNGROUNDED SYSTEMS:
- DC OCPD MUST DISCONNECT BOTH CONDUCTORS OF EACH SOURCE CIRCUIT
- UNGROUNDED CONDUCTORS MUST BE IDENTIFIED PER 210.5(C). WHITE-FINISHED CONDUCTORS ARE NOT PERMITTED.

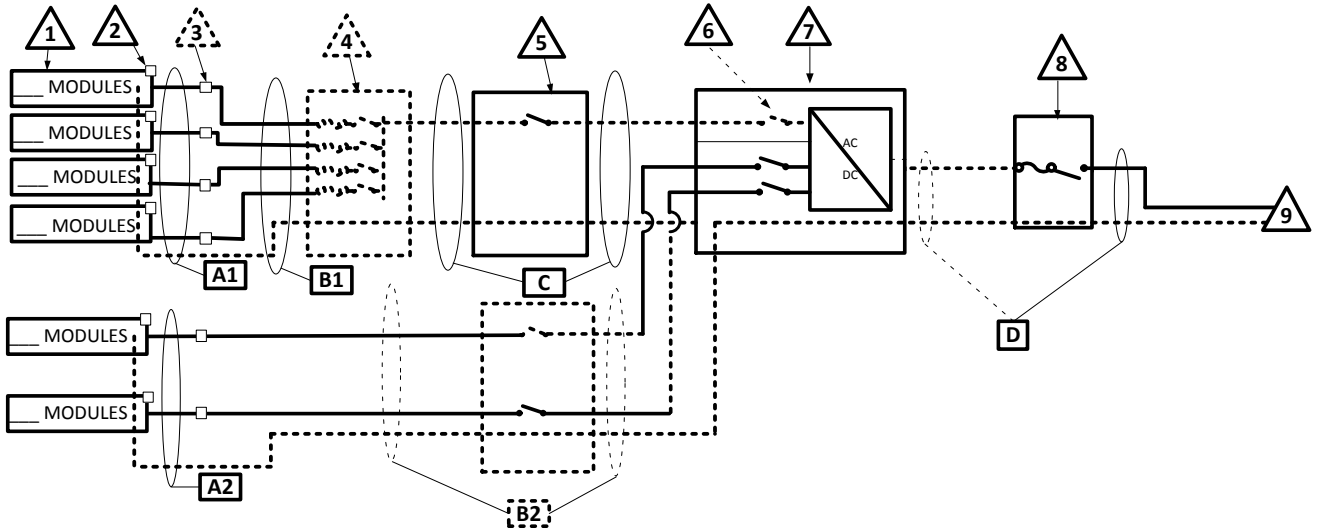

COMBINER CONDUCTOR/CONDUIT SCHEDULE					
☐ TAG	DESCRIPTION AND CONDUCTOR TYPE	CONDUCTOR SIZE	NUMBER OF CONDUCTORS	CONDUIT/CABLE TYPE	CONDUIT SIZE
A1	USE-2 ☐ OR PV-WIRE ☐				
	EGC/GEC:				
B1					
	EGC/GEC:				
C					
	EGC/GEC:				
D					
	EGC/GEC:				

NON-COMBINED STRINGS CONDUCTOR/CONDUIT SCHEDULE (IF APPLICABLE)					
☐ TAG	DESCRIPTION AND CONDUCTOR TYPE	CONDUCTOR SIZE	NUMBER OF CONDUCTORS	CONDUIT/CABLE TYPE	CONDUIT SIZE
A2	USE-2 ☐ OR PV-WIRE ☐				
	EGC/GEC:				
B2					
	EGC/GEC:				

ENTER "N/A" WHERE SUITABLE FOR WHEN NOT USING CONDUIT OR CABLE AS PERMITTED BY CODE

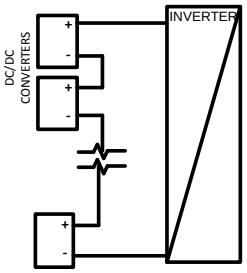

IF DC/DC CONVERTERS ARE USED, THEY ARE RUN IN SERIES (FIXED SOURCE CIRCUIT VOLTAGE DC/DC CONVERTERS)

SOLAR PV STANDAR PLAN

Roof Layout Diagram for One- and Two-Family Dwellings

Items required: roof layout of all panels, modules, clear access pathways and approximate locations of electrical disconnecting means and roof access points.